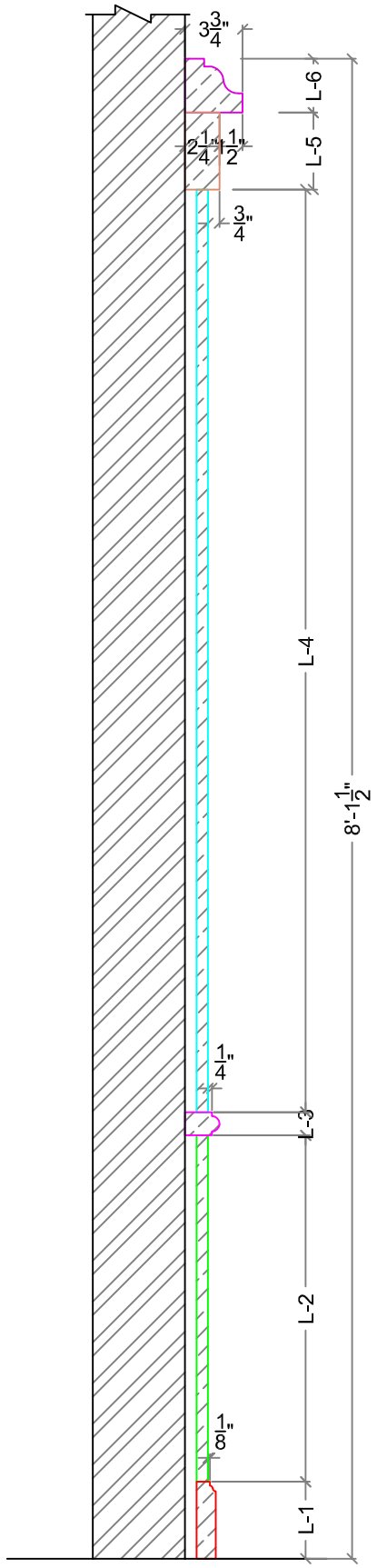

TYPICAL WALL SECTION

SCALE : 0'-1"=1'-0"

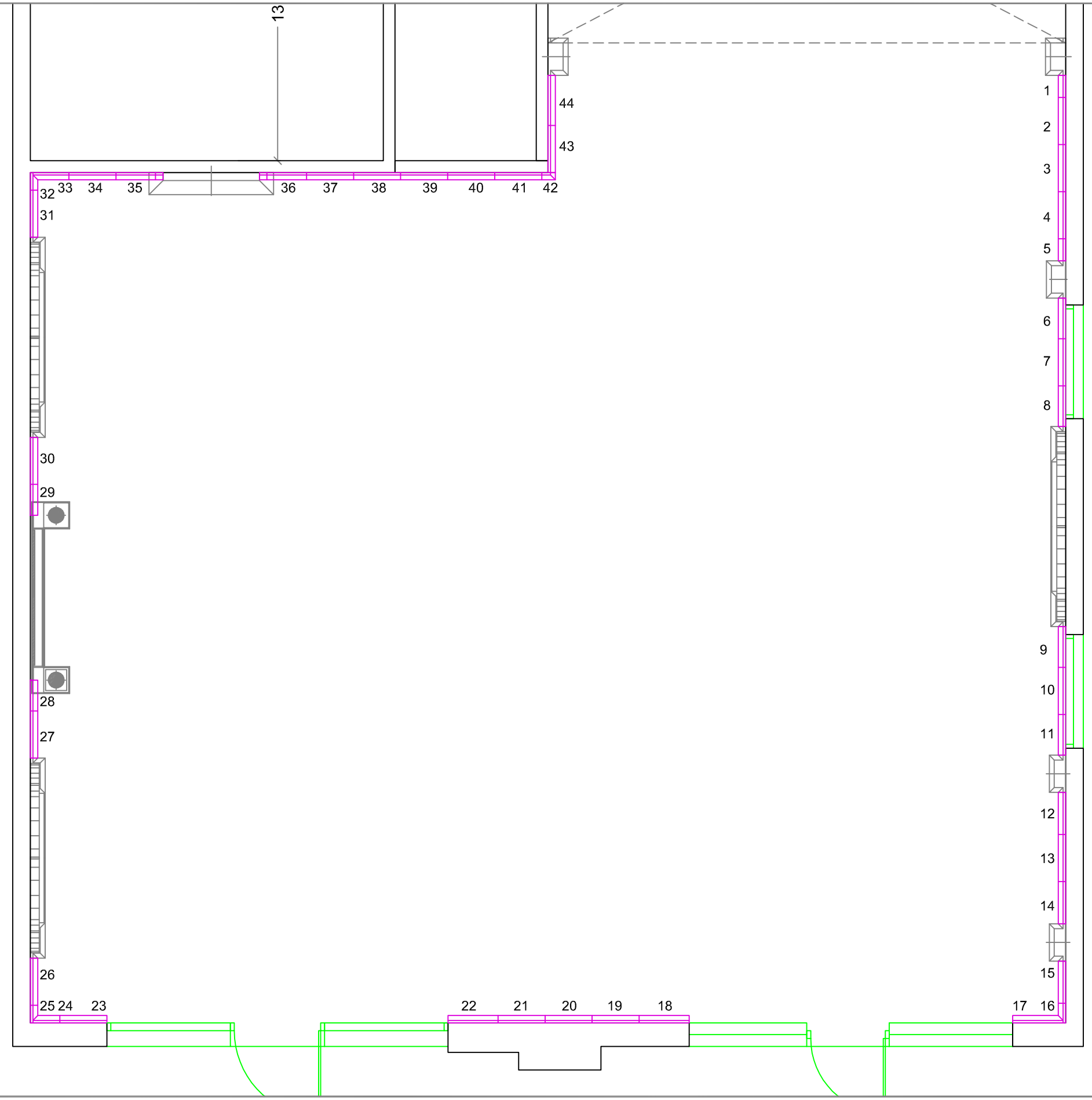

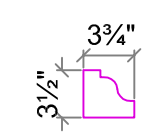

Layer-6

DATE	SCALE	DRG NO	DATE OF DISPATCH	QUALITY	DEPTH OR CARVING	MARKING LOCATION	DRAWN BY	CHECKED BY	INSPECTED BY	SHEET NO
14/05/0	0'1"=5'0"	TCPL/SF/JC/L6/PLN/0 –	–			4	NITIN	MD	VKT	01

STONE NO	TOLERANCE	MATERIAL	SURFACE
01 TO 44	X Y Z ± ± ±	WHITE	< MATT <<< FINE POLISH << POLISH <<<< SUPER FINE

NOTE: –

* THIS DRAWING IS THE INTELLECTUAL PROPERTY OF TRIVEDI TECTONICS AHMEDABAD.
* UNAUTHORISED REPRODUCTION AND USE/MISUSE IS PROHIBITED.

PROJECT NAME : JAIN CENTER AT SOUTH FLORIDA

DRAWING NAME : LAYER-6 PLAN

TRIVEDI TECTONICS
68 PREMANJALI, BODAKDEV, AHMEDABAD - 380015 INDIA
TELEPHONE +91-79-2687-3666 FAX +91-79-2687-0220
e-mail : tectonics@trivedi-marble.com website : www.trivedi-marble.com